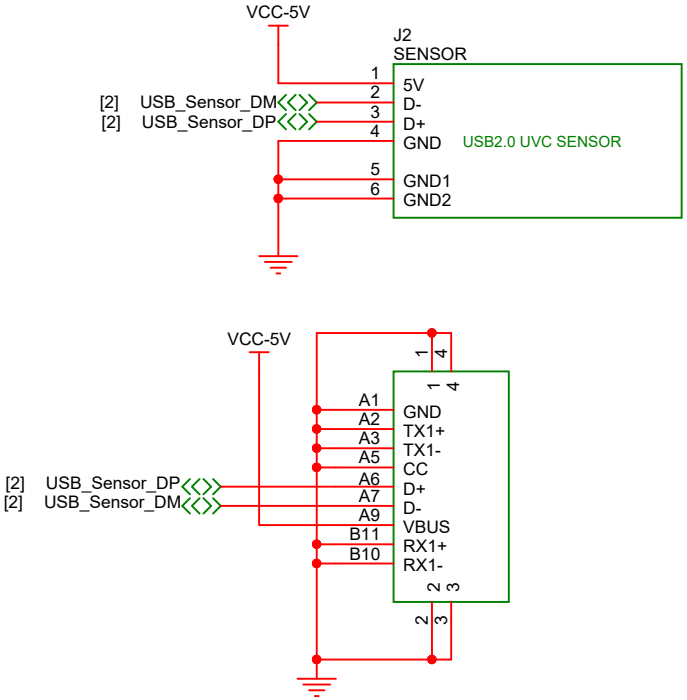

Sipeed Technology Co.,Ltd		
Design Name <Title>		
Size A4	Page Name <Doc>	Rev <RevCode
Date: Wednesday, April 14, 2021	Sheet 1 of 1	